APPROVED BY _____ DATE _____ PAINT CODE PW7 BRIGHT WHITE

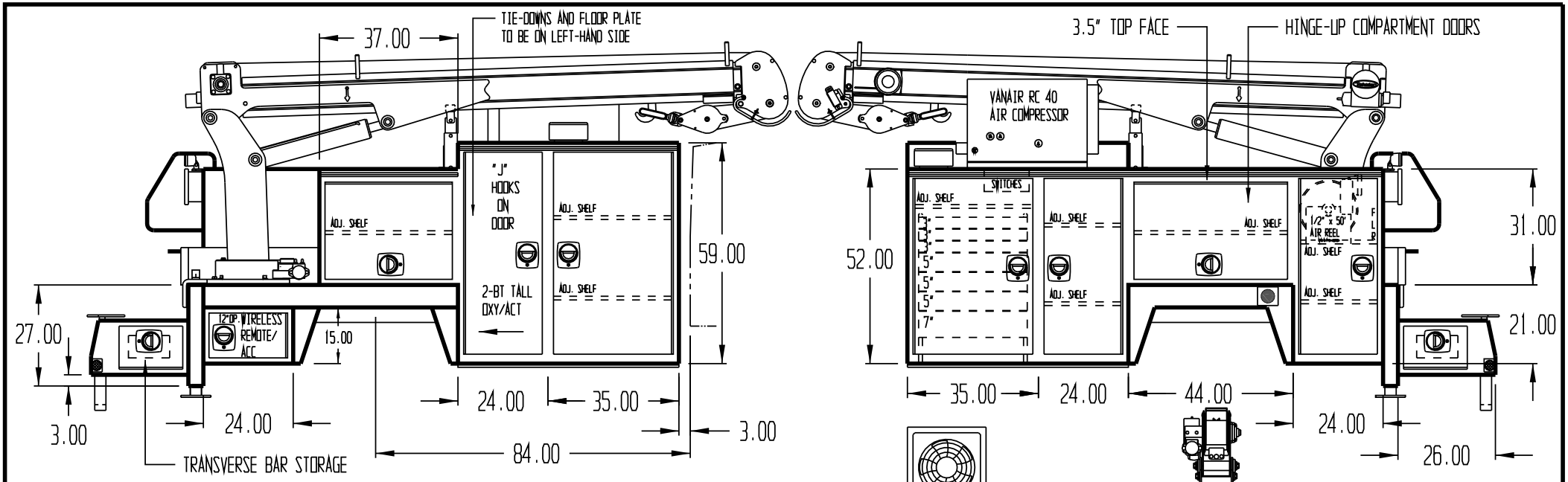

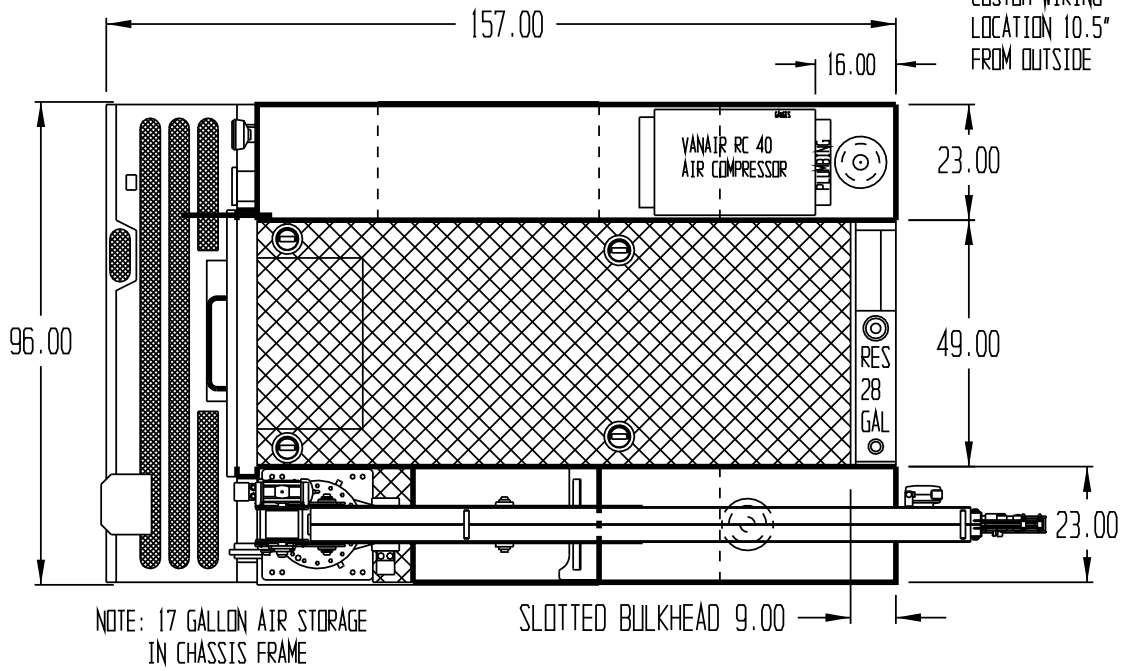

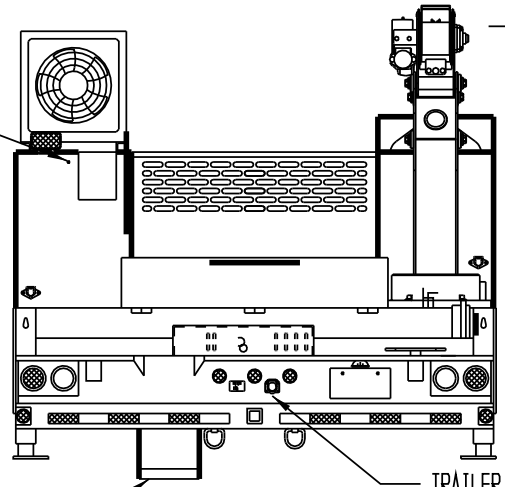

NOTE: INTERIOR PETERSON #391 LIGHTS SS 1, 2, 3, 4 & CS 1, 3

NOTE: PPG SPLATTER PAINT INTERIOR OF COMPARTMENTS

NOTE: PROTECTIVE SPRAY COVERING: ***COMPARTMENT FRONTS ONLY***

NOTE: USABLE CENTER DECK CARGO WIDTH 48.50"

NOTE: 10" TALL SUBFRAME WITH FORMED CROSS MEMBER ANGLES

THIS PRINT CONTAINS CONFIDENTIAL INFORMATION AND IS THE SOLE PROPERTY OF MAINTAINER CORP. OF IOWA INC. AND IS NOT TO BE COPIED OR REPRODUCED WITHOUT THE EXPRESSED WRITTEN PERMISSION OF MAINTAINER CORP. OF IOWA INC.

PROPRIETARY DATA PROPERTY OF MAINTAINER CORPORATION OF IOWA, INC.

COPYRIGHT © 2002

UOS DIMENSIONS ARE IN INCHES
GENERAL TOLERANCES
BREAK ALL EDGES .01 X 45°
ANGULAR ± 1°
.XX ± .03
.XXX ± .005
UOS RADII
UOS ANGLES

MADE IN THE USA

MATERIAL:

SCALE: 1:26 SIZE: B

DRAWING NUMBER: GG345-GG354

Maintainer
Corporation of Iowa, Inc.
P.O. Box 349 1701 S. 2nd Avenue
Sheldon, Iowa 51201

DFTM. LAG DATE: 6/09/15

H6520TT-1-084 HAG / STOCK - DODGE RAM